Shanghai Mitsubishi Elevator Co., Ltd.
Address: No. 811 Jiangchuan Road. Minhang, Shanghai, China
Tel : +86-21-24083030/64303030
Fax : +86-21-24083088
Post: 200245

Overseas Business
Tel : +86-21-24083482
Fax : +86-21-24083488
e-mail : overseasbiz@smec-cn.com

上海三菱电梯有限公司
SHANGHAI MITSUBISHI ELEVATOR CO.,LTD.
www.smec-cn.com

Specifications subject to change without notice
Printed in Oct. 2015 (GB-C)

上海三菱电梯
SHANGHAI MITSUBISHI ELEVATOR

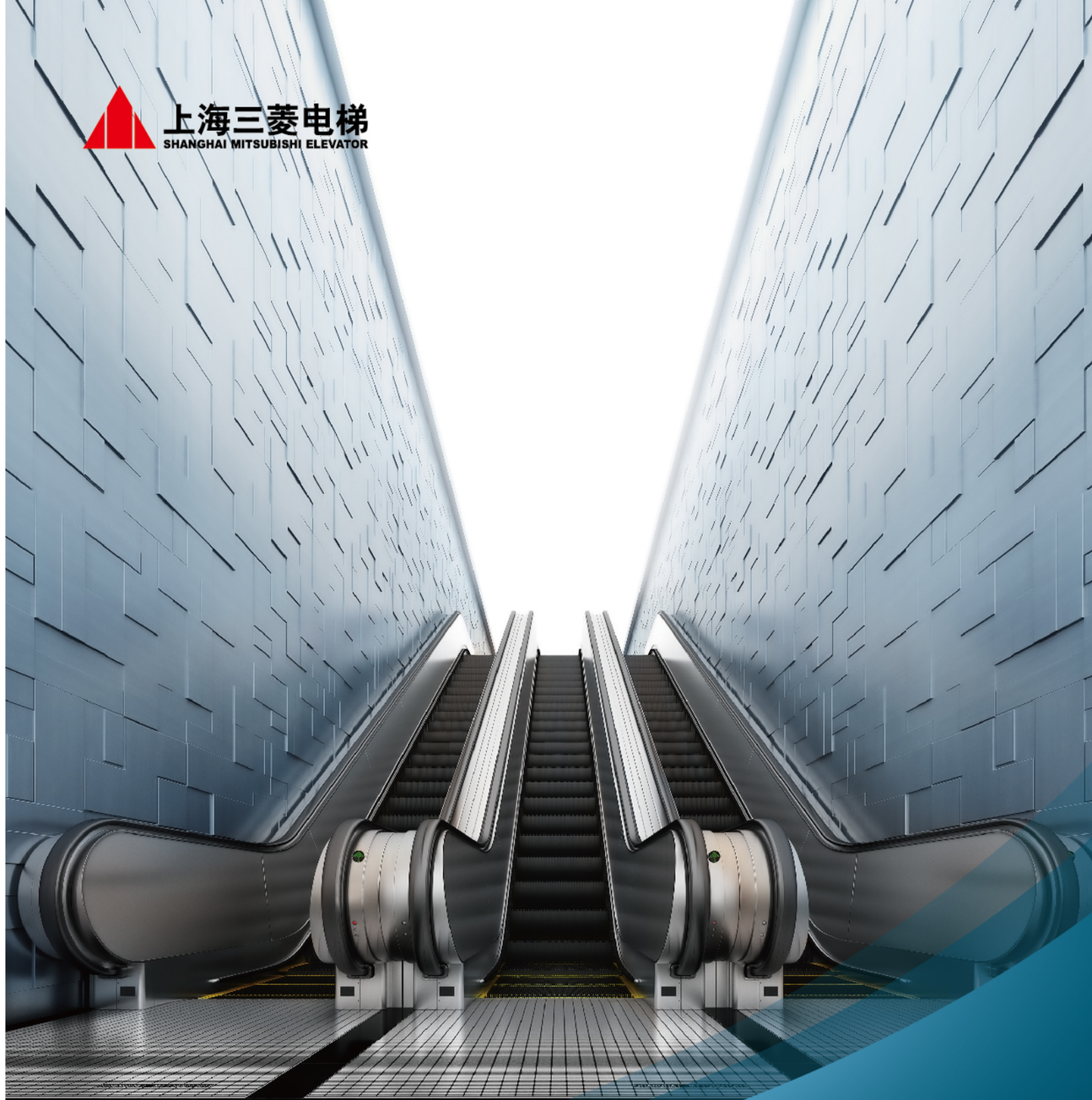

Series HE

Public Service Escalator

To response to largely rising height To satisfy with large passenger flow transportation

Mitsubishi Elevator launched Public Service Escalator

Series HE | Escalator

Glorious Relay Creates Splendid Future

To deal with large passenger flow transportation and lifting height, Mitsubishi Elevator Enterprise designed Series HE Escalator in accordance with the requirement for public service escalator in GB16899-2011. This special escalator is mainly suitable for public transportation, such as subway stations, light rail stations, airports etc. and can also be used for other places such as hotels, shopping malls etc.

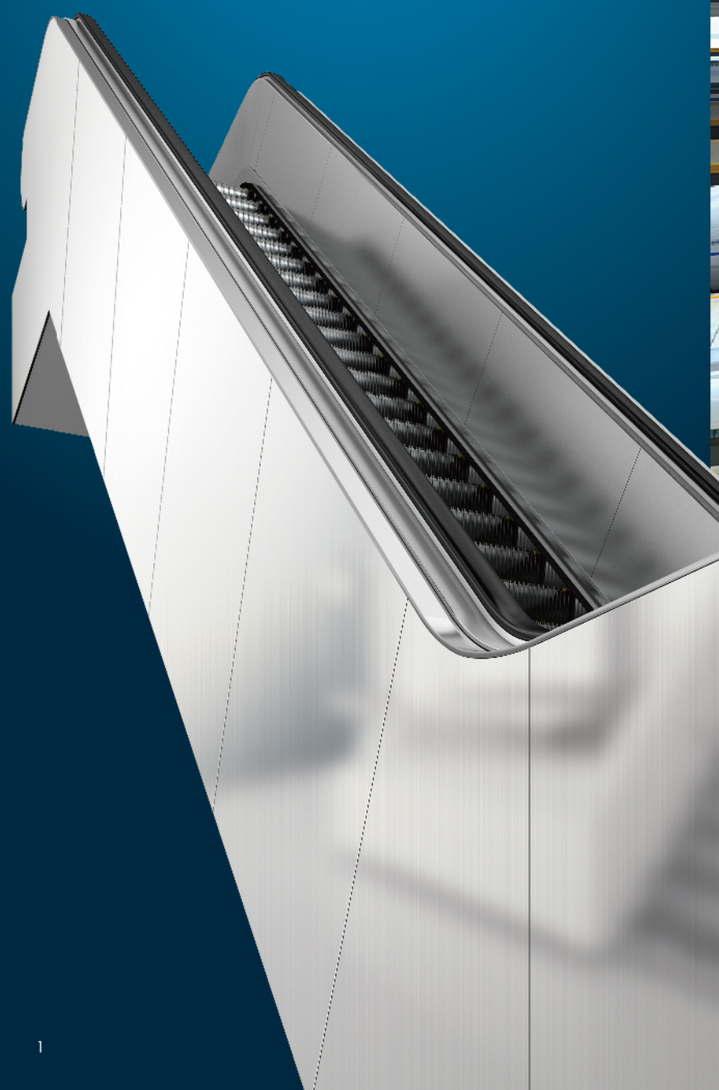

General

High-technology Exceeding Sustained power ---- P.3
Challenge Special Environment ---- P.5
Safety Devices Double Protection ---- P.7

Design

Fashion and Style ---- P.9
Decorative Parts Show
Personal Configuration ---- P.11

Functions

Function Table ---- P.13

Specifications

Basic Specification ---- P.16

Pictures of computer painting may slightly differ from the actual.

High Precision Worm Gear and Helical Gear Reducer

Public service escalator has to firstly face the challenge of sustained heavy duty, carry high precision worm gear and helical gear reducer as well as highly integrate both advantages of worm gear drive and helical gear drive. Worm and gear can transmit larger moment in relatively small spaces, while helical gear owns low noise, stable drive and good damping. Their effective combination makes the escalator more efficient to fight against the sustained load pressure.

Step Chain

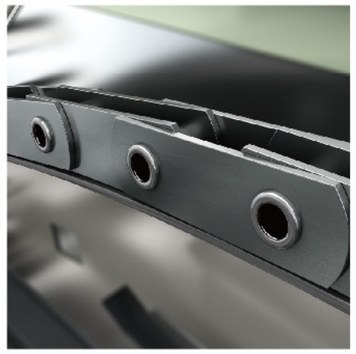

It is equipped with enhanced step chain, which ensures safety and comfort under heavy duty of Series HE.

Unloading Guide Rail

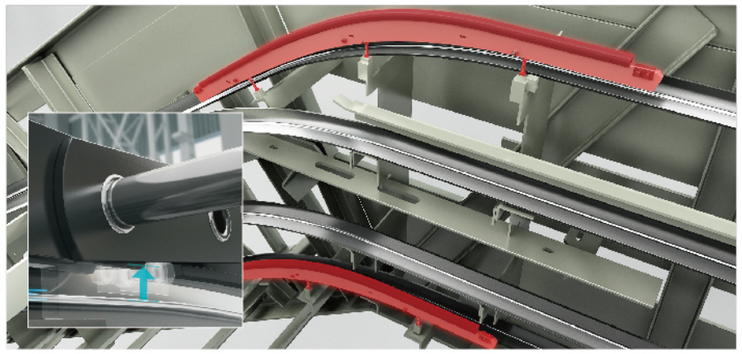

In the face of upper great tension, the upper bending section of Series HE escalator is equipped with four unloading guide rails to ensure the bearing force is close to zero by separating with guide rail when the roller comes to upper bending section, so as to lower roller wear and lengthen service life.

Full Frequency Conversion Control System with Energy Feedback

To maximize the efficiency of the escalator.

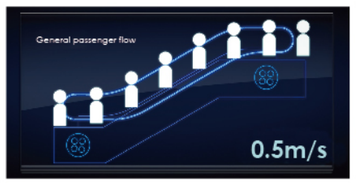

To ensure running efficiency and to reduce energy consumption.

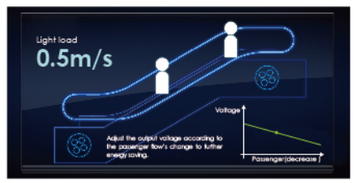

Output voltage decreases with the decrease of passenger flow.

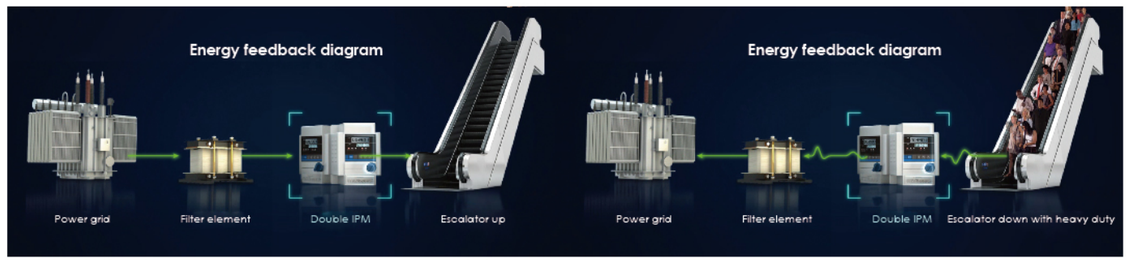

Handle feedback and use saved energy through intelligent double IPM professional frequency converter.

Pictures of computer painting may slightly differ from the actual.

High-technology Exceeding Sustained Power

Challenge Special Environment

Roller Sealing Design

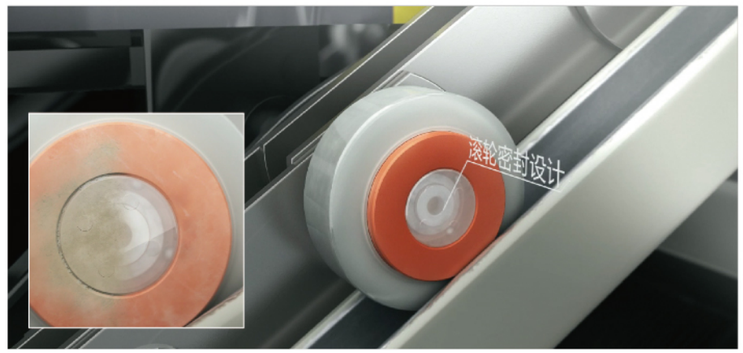

Generally, public service escalators face high temperature, sand, steam and other special operation environment challenges. Here Series HE escalator employs full sealed step roller design to reduce dust into bearing, lengthening the service life of rollers.

Reliable Truss Rust-proof Treatment

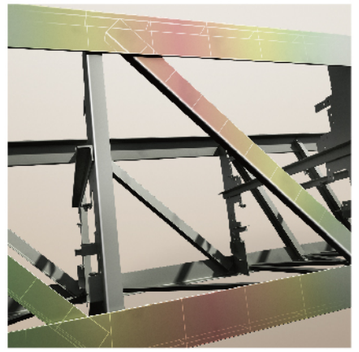

As external humid environment is inevitable, Series HE escalator adopts high strength angle steel truss material with advantages of bending resistance and anti corrosion.

Double-deck Truss

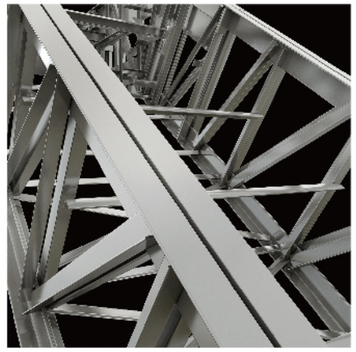

When the escalator reaches a certain span, Mitsubishi double-deck truss can be used to fully meet the requirements for radial degree and strength. The truss is steady and firm to further safety.

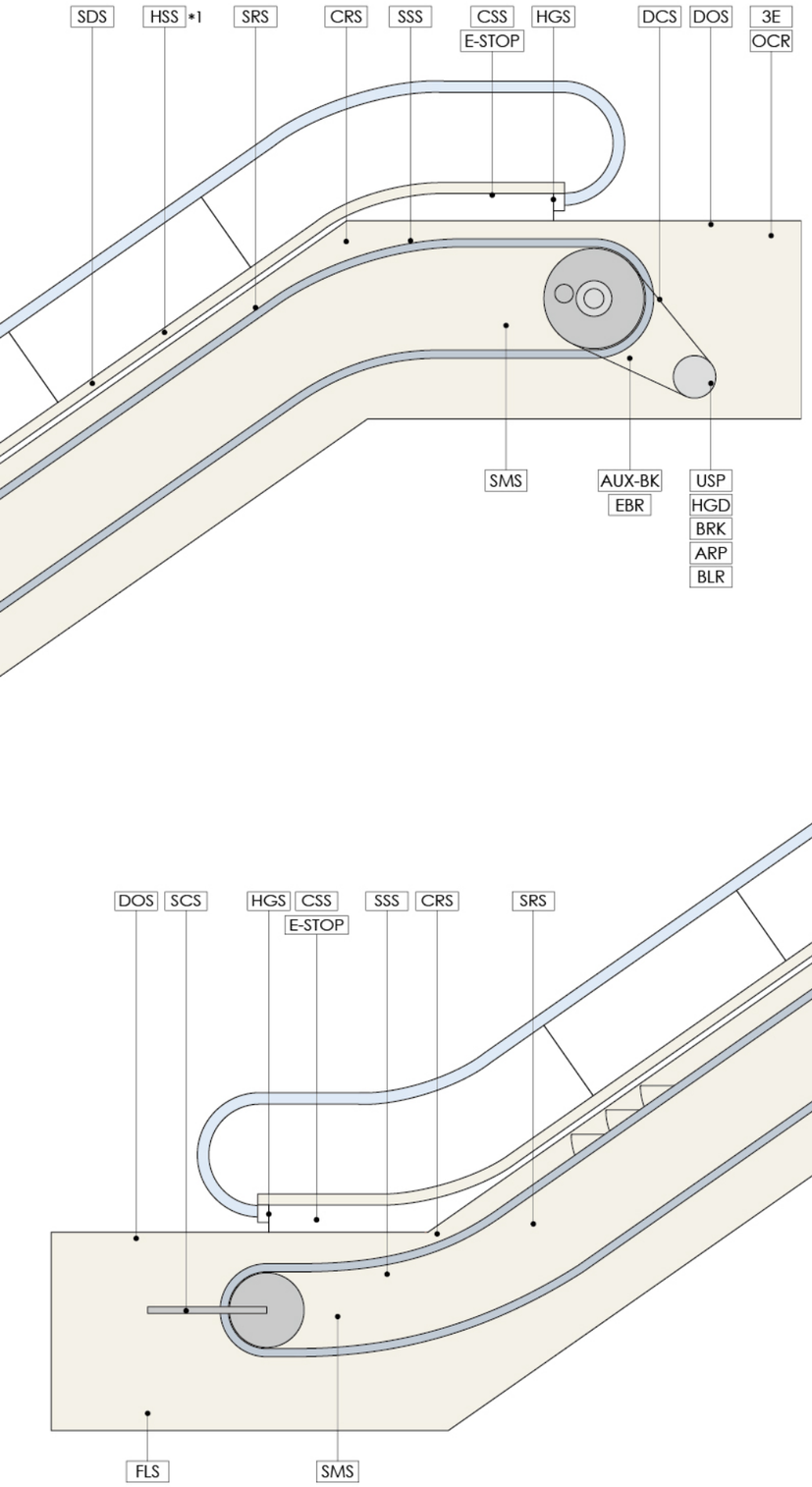

Configuration Table of Safety Devices

DCS	Drive Chain Safety Device	Standard
SCS	Step Chain Safety Device	Standard
HGS	Handrail Inlet Safety Device	Standard
BRK	Service Brake	Standard
HGD	Over-speed	Standard
SRS	Steps Sinking Safety Device	Standard
SMS	Steps Missing Safety Device	Standard
E-STOP	Emergency Stop Button	Standard
CSS	Comb Plate Safety Device	Standard
USP	Low Velocity Protection	Standard
AUX-BK	Auxiliary Brake	Standard
3E	Phase Dislocation/ Phase Loss Protection	Standard
SSS	Skirting Panel Safety Device	Optional
CRS	Bended Guide rail Safety Device	Optional
HSS	Handrail Velocity Inspection	Standard
SDS	Pinch-proof Device at the Skirting	Standard
DOS	Cover Plate Safety Device	Standard
ARP	Non-manipulated Reversion Protection	Standard
BLR	Detection of Service Brake Actions	Standard
EBR	Detection of Auxiliary Brake Actions	Standard
FLS	Water Level Warning Device *2	Standard
OCR	Motor Overload Protection	Standard

*1: Different models (Type S, Type P) have different locations.

*2: Standard configuration is only for outdoor use or semi-outdoor use.

Safety Devices Double Protection

Prevent escalators from Backspin to Ensure Safety

Drive Chain Safety Device D.C.S

For DCS safety device with unique detection and action protection functions, once the drive chain is found broken or excessively long, the spine brake will immediately trigger upper sprocket and safety detection switch to immediately start the additional brake, stopping the escalator.

Double Protection

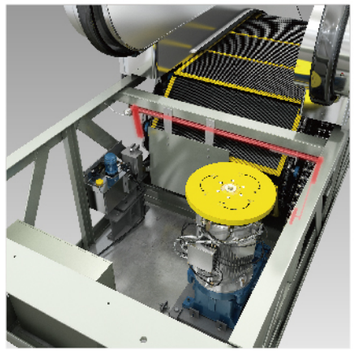

Mitsubishi owns more reliable and effective security devices, which provide you with double detection and double protection.

Stop Device - Double Spike Brake

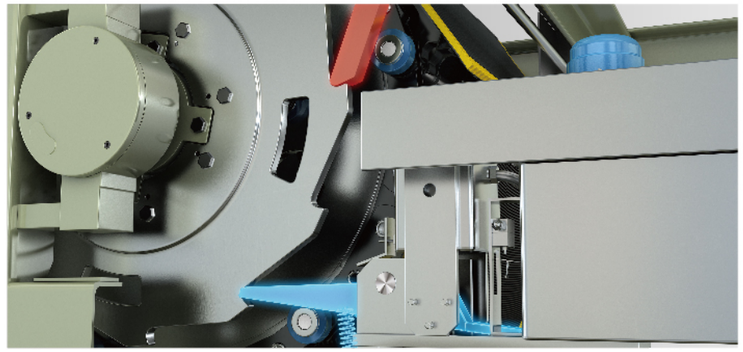

Double GOV Detection Device

Once an abnormal operating speed appears, double GOV detection device will immediately trigger stop device, fundamentally preventing the escalator from backspin.

Pictures of computer painting may slightly differ from the actual.

Type of the Balustrade
HES-LBF

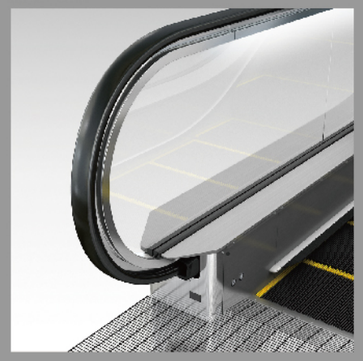

Instructions to the Components Indicated in the Figure

Internal Side Plate
Rectangular glass plate
(glass joints perpendicular to running direction of the steps)

Steps
Integral aluminum alloy die casting step (with black coating)

Handrail
Black (Color No. 001) (With other options available)

Internal and External Cover Plates
Hairline Stainless Steel

Skirt Panel
Hairline Stainless Steel

Lighting
Handrail lighting and lighting under steps

Front Plate
Stainless Steel with Anti-skid Grooves

Type of the Balustrade
HES-SBF

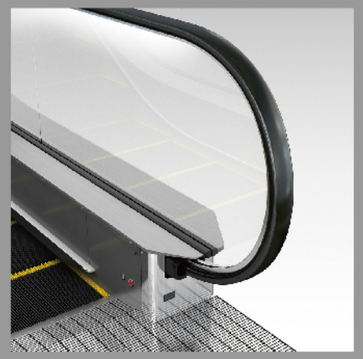

Instructions to the Components Indicated in the Figure

Internal Side Plate
Rectangular glass plate
(glass joints perpendicular to running direction of steps)

Steps
Integral aluminum alloy die casting step (with black coating)

Handrail
Black (Color No. 001) (With other options available)

Internal and External Cover Plates
Hairline Stainless Steel

Skirt Panel
Hairline Stainless Steel

Lighting
Lighting under steps

Front Plate
Stainless Steel with Anti-skid Grooves

Series HE escalators own simple and smooth appearance and first-class texture. The main parts are made of hairline stainless steel and guardrail is optionally made of toughened glass or stainless steel plate and other materials; a variety of trendy hand straps and colored glass panels can be selected to match with any building environment.

Type HEP-BF escalator is equipped with full stainless steel handrail full of power and charming hairline fine processing, solid and durable, especially for public transportation center.

Type HES-SBF escalator is equipped with very fine stainless steel handrail guide rail with very compacted structure to make passengers feel that the hand strap slides on glass; this type of escalator is concise and lively, burnishing hotels, shopping centers and other high range places.

Type HES-LBF escalator is equipped with lighting under handrail, which creates a bright space. Quiet and smooth light especially serves as a foil to the elegance of the place.

Fashion and Style –
Inspiration of Technologies from Life

Type of the Balustrade
HEP-BF

Instructions to the Components Indicated in the Figure

Internal Side Plate
Hairline Stainless Steel

Steps
Integral aluminum alloy die casting step (with black coating)

Handrail
Black (Color No. 001) (With other options available)

Internal and External Cover Plates
Hairline Stainless Steel

Skirt Panel
Hairline Stainless Steel

Lighting
Lighting under steps

Front Plate
Stainless Steel with Anti-skid Grooves

 Pictures of computer painting may slightly differ from the actual.

Internal Side Plate

Standard: Hairline stainless steel plate (Model: HEP-BF)
Rectangular glass plate
(glass joints perpendicular to running direction of steps)
(Model: HES-SBF, HES-LBF)

Optional: Parallelogram plate glass
(glass joints perpendicular to the horizontal plane)
(Model: HES-SBF, HES-LBF)

Skirt Panel

Hairline stainless steel

Cover Plate

Hairline stainless steel

Steps

Integral aluminum alloy die casting step

Pinch-proof Device at the Skirting

Double-groove black hairbrush

Handrail

Microwave-type passenger sensing device

Front Plate

Stainless Steel with Anti-skid Grooves

* As specification is related with the product delivery date, please contact Shanghai Mitsubishi Elevator Co. Ltd for confirmation.

Operation Indicator

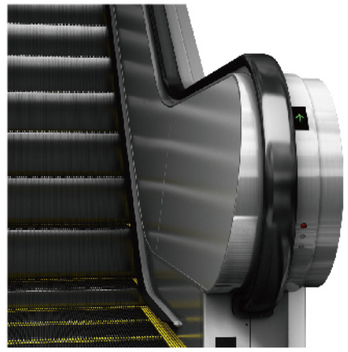

Operations indicator at the handrail newel balustrade
(Only for HEP-BF)

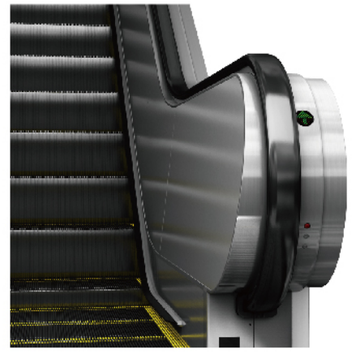

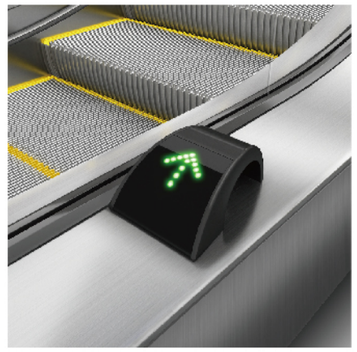

ZIN-01
(Only for indoor)

Decorative Part Personal Configuration

Customize Your Own Decoration Scheme

Pinch-proof Device at the Skirting

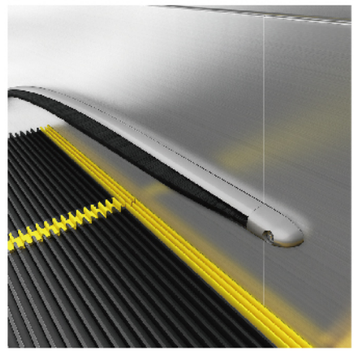

Match silver base with black hairbrush

Skirt Panel

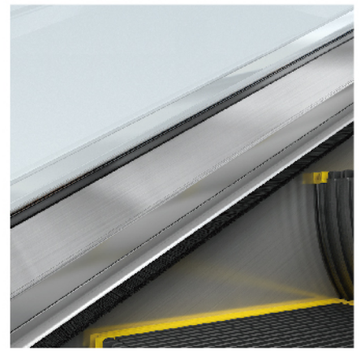

Hairline stainless steel

Internal and External Cover Plates

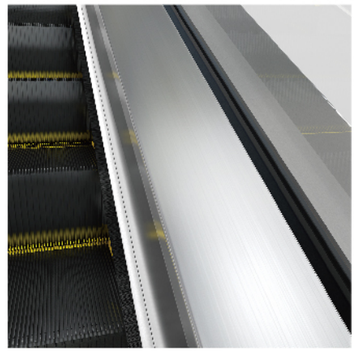

Hairline stainless steel

Steps

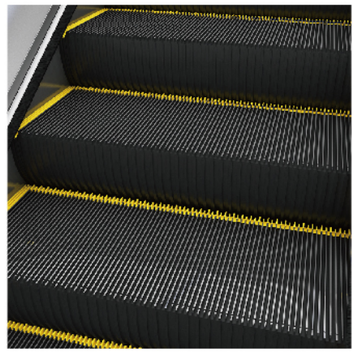

Aluminum Alloy Steps
With yellow resin strips on three sides, black grey coating

Comb

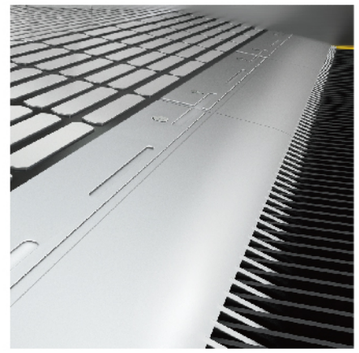

Silver Aluminum Alloy

Front Plate

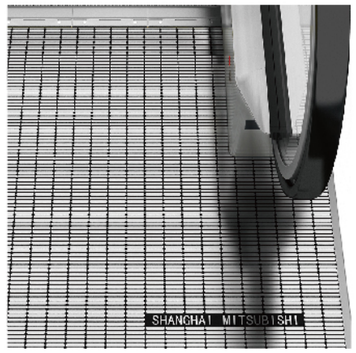

Stainless Steel with Anti-skid Grooves

Pictures of computer painting may slightly differ from the actual.

Feature	Description	Code	
■ Control and Security Features			
Phase Dislocation/ Phase Loss Protection	In case of phase dislocation or phase loss of the input power supply, cut the main circuit and control the circuit to stop the escalator.	3E	Ⓢ
Non-manipulated Reversion Protection	In case of accidental reversion of the escalator, the device will cut down the power supply to the main drive motor and the brake.	ARP	Ⓢ
Auxiliary Brake	When the escalator reaches 1.4 times of the rated speed or is not operating in the required direction, the auxiliary brake stops the escalator.	AUX-BK	Ⓢ
Detection of Service Brake Actions	Stop the escalator when the service brake cannot release or brake normally.	BLR	Ⓢ
Detection of Service Brake Wear	Stop the escalator when the service brake is excessively worn.	BLS	Ⓢ
Service Brake	The service brake takes action to stop the escalator, and keep it stopped.	BRK	Ⓢ
Bended Guide rail Safety Device	When any object gets pinched between the pallets of two steps and causes abnormality of the operation, stop the escalator.	CRS	◎
Comb Plate Safety Device	When any foreign object falls between the pallets and the comb plate, stop the escalator.	CSS	Ⓢ
Detection of Contactor Action	In case of any abnormality with the contactor, stop the escalator.	CTD	Ⓢ
Drive Chain Safety Device	When the drive chain breaks or extends abnormally, stop the escalator.	DCS	Ⓢ
Cover Plate Safety Device	When the maintenance cover plate is taken out, stop the escalator or prevent it from starting.	DOS	Ⓢ
Emergency Stop Button	In emergency, use this device to stop the escalator.	E-STOP	Ⓢ
Detection of Auxiliary Brake Actions	When the auxiliary brake is not in place, prevent the escalator from starting. (When the rise is above 6m)	EBR	Ⓢ
Electric Safety Circuit Protection	When there is any action in the electric safety devices connected in serial, stop the escalator.	ESC	Ⓢ
Detection of Braking Distance	When the brake distance gets longer than 1.2 times the defined maximum, prevent the escalator from starting.	ESD	Ⓢ
Water Level Warning Device	When too much water is accumulated in the lower truss, stop the escalator.	FLS *1	Ⓢ
Handrail Anti-static Device	The device prevents static from occurring on the handrail.	HER	Ⓢ
Over-speed	Stop the escalator before the operational velocity grows above 1.2 times the nominal velocity.	HGD1	Ⓢ
Over-speed Limitation Device	Stop the escalator before the operational velocity grows above 1.4 times the nominal velocity. (when the rise is above 6m)	HGD2	Ⓢ
Handrail Inlet Safety Device	When any foreign object gets pinched into the handrail inlet, stop the escalator.	HGS	Ⓢ
Handrail Velocity Inspection	When the velocity of the handrail is below the rated value, and the condition lasts for a period of time, stop the escalator.	HSS	Ⓢ
Under-voltage Protection	When the voltage of the frequency converter is too low, stop the escalator.	LVP	Ⓢ
Over-current Protection	When the electric current of the frequency converter is too strong, stop the escalator.	OCP	Ⓢ
Motor Overload Protection	When the motor is overloaded, stop the escalator.	OCR	Ⓢ
Over-voltage Protection	When the voltage of the frequency converter is too high, stop the escalator.	OVP	Ⓢ
Detection of Power Phase	Automatically inspect the power phase and frequency, and switch to bypass frequency converter in a shock-free manner. Realize self-adaptation control of power factors with the full frequency converter.	PLL	Ⓢ
Error of the Passenger Detection Device	Self-diagnosis of error with the passenger detection device. In case of any error, cancel the standby model.	PSD	Ⓢ
Step Chain Safety Device	When the step chains break or extend abnormally, stop the escalator.	SCS	Ⓢ
Pinch-proof Device at the Skirting	Device with a rigid base installed on the skirting panels, to prevent foreign objects or feet from falling between the skirting panels and the steps.	SDS	Ⓢ
Step Anti-static Device	The device prevents static from occurring on the steps.	SER	Ⓢ
Steps Missing Safety Device	When there is any step missing, the device takes action to stop the escalator.	SMS	Ⓢ
Steps Sinking Safety Device	If any part of a step sinks and the step cannot mesh with the comb plate, stop the escalator.	SRS	Ⓢ
Skirting Panel Safety Device	When any foreign object falls between steps and skirting panels, stop the escalator.	SSS	◎
Monitoring Cohesion of the Starting Switch	In case of cohesion of the starting switch, prevent the escalator from starting.	SWD	Ⓢ

Feature	Description	Code	
■ Control and Security Features			
Overheating Protection of Frequency Converter	When the frequency converter is overheated, stop the escalator.	THMF	Ⓢ
Low Velocity Protection	When the velocity of the escalator is below the rated velocity, stop the escalator.	USP	Ⓢ
■ Emergency Operations			
Fire Stop	When a signal of fire-fighting action is received, stop the escalator.	FSS	◎
■ Operations and Service Functions			
Repair	The escalator can be set to the operation under repair model, to make the installation and commissioning convenient.	HAND	Ⓢ
Manually Shut Down Illumination	Open or shut down illumination manually with the switch. (When auxiliary illumination below steps and/or at the handrails is equipped)	LO-M *2	Ⓢ
Automatic Operation	Through the usage of passenger detection devices, the escalator could operate with the nominal speed when there is any passenger, and shift to standby in case of no load.	MDA	Ⓢ
Automatic Oil Feeding	Add lubricating oil to the chains of the escalator at predetermined time automatically.	OIL	Ⓢ
Passenger Detection Device: Microwave but not the Column Pattern	Adopt microwave sensors for the passenger detection device.	PSM *3*4	◎
Passenger Detection Device: Column Pattern	Adopt the photoelectric column for the passenger detection device.	PSP *3*4	◎
Low Velocity Standby	The escalator operates below the nominal velocity in the condition of no load.	SBLS *5	◎
Stop Standby	The escalator stops in the condition of no load.	SBSP *5	◎
Star-triangle Start	Adopt the switch method of star-triangle start. Frequency conversion steps serve as back-up function.	SSD	◎
Optional Directions of Operation	The direction of escalator operation could be reversed.	UDA	Ⓢ
Bypass Frequency Converter	Supply power with frequency converter at starting, stop, and low velocity standby, and shift to direct drive with mains during operations with rated velocity.	VFBF	Ⓢ
■ Information and Display			
Displaying Safety Device Codes	Carry out one-on-one inspection on safety devices, and display response error codes if there is any error.	ASD	Ⓢ
BA Interface	Use passive dry contact to output signals indicating basic status of the escalator.	BA	◎
Buzzer	Remind the passengers of escalator starting, error, reversion, and etc.	BUZ	Ⓢ
Operational Direction Indication	Indicate the passengers the operational direction, stop, no entry, or other conditions of the escalator.	DI	Ⓢ
Reminder of Fire-protection Stop	When the escalator stops for fire-protection reasons, release the signal of fire-protection stop.	FE-CP	◎
Handrail Illumination	Illumination at the lower edge of the handrail.	L-BAL *6	Ⓢ
Illumination Below Steps	Illumination at the inlet and outlet of the staircase, highlighting the edge of the staircase.	L-STP *7	Ⓢ
The Monitoring System	The system monitors the status of the escalator with computers, and gives orders of starting or stop when necessary.	SMOS-II	◎

Remarks

*1 Outdoor or semi-outdoor
*2 With only lighting configuration
*3 Optional from PSM and PSP (PSM is recommended)
*4 Non-standard
*5 Optional from SBLS and SBSP (SBSP is recommended)
*6 Only for Model: HES-LBF
*7 Standard for indoor only
*8 Ⓢ Standard functions ◎ Optional functions

Basic Specification

Item	Specification	Remarks
Serial No.	HEP-BF, HES-LBF, HES-SBF	It can be corresponding to HES-BF
Nominal width between handrails (mm)	1200	
Velocity (m/s)	0.5, 0.65	
Angle of inclination (degree)	30	
Escalator rise (mm)	3000~16000	Model: HEP-BF, HES-LBF, HES-BF
	3000~10000	Model: HES-SBF
Applicable environment	Indoor	Please contact Shang Mitsubishi Elevator for outdoor use/semi-outdoor use to ensure environment factors.
Upper Curvature Radius(mm)	2702, 3602	
Horizontal Steps Numbers	3, 4	
Drive system	VVVF drive	
Drive power supply	380V50Hz three-phase and five-wire	
Illumination power supply	220V50Hz single phase	
Distance between center lines	1260	Model: HEP-BF
of handrails (mm)	1280	Model: HES-LBF, HES-BF
	1208	Model: HES-SBF
Nominal width of steps (mm)	1004	
Maximum load (person/hour)	6000	Speed: 0.5m/s
	7300	Speed: 0.65m/s

上海三菱电梯有限公司
SHANGHAI MITSUBISHI ELEVATOR CO.,LTD.

If any suggestions on sales, installation, maintenance services consultation and complaints, please call 24-hour service hotline:

4008203030